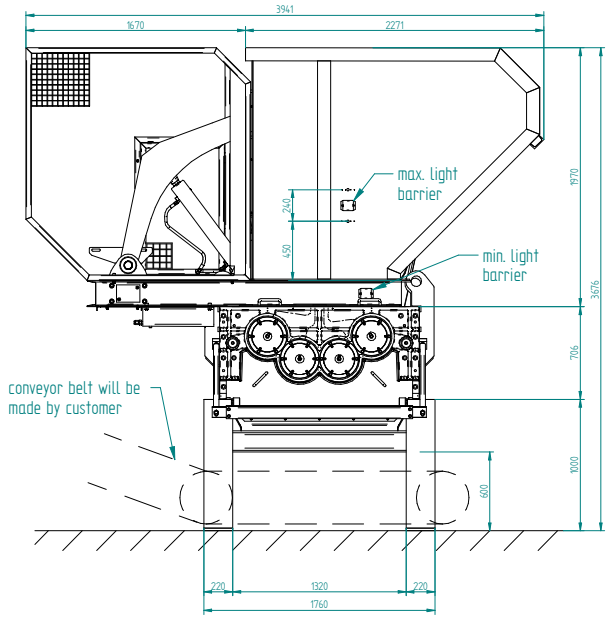

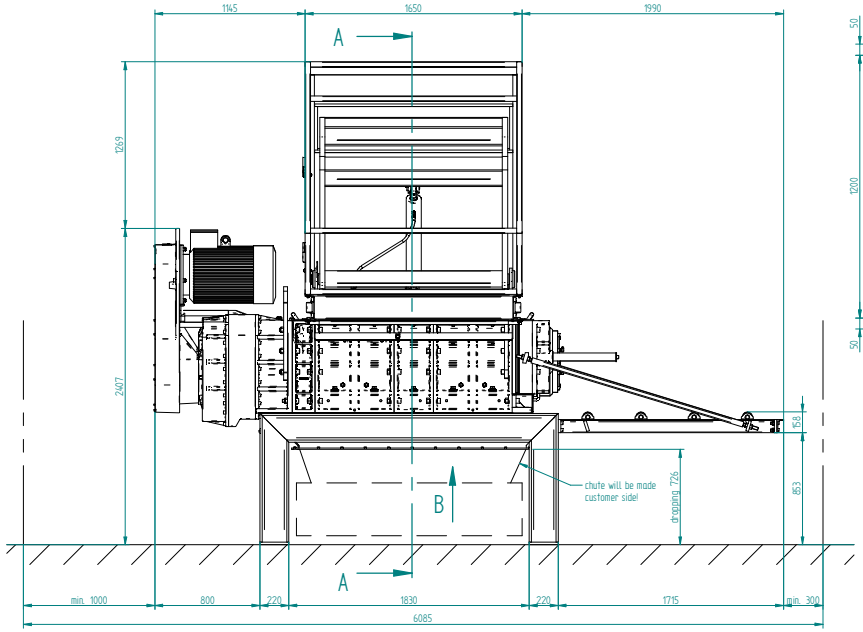

connection dimension chute

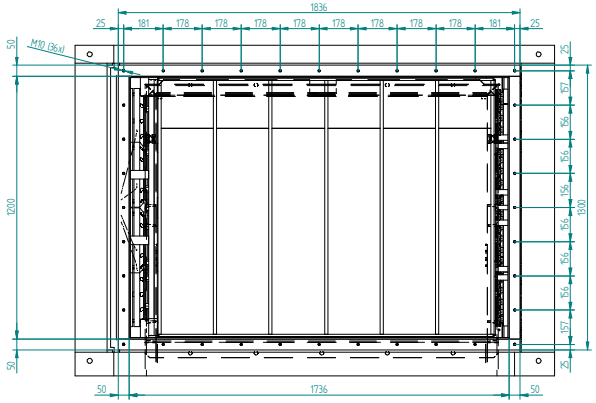

view B

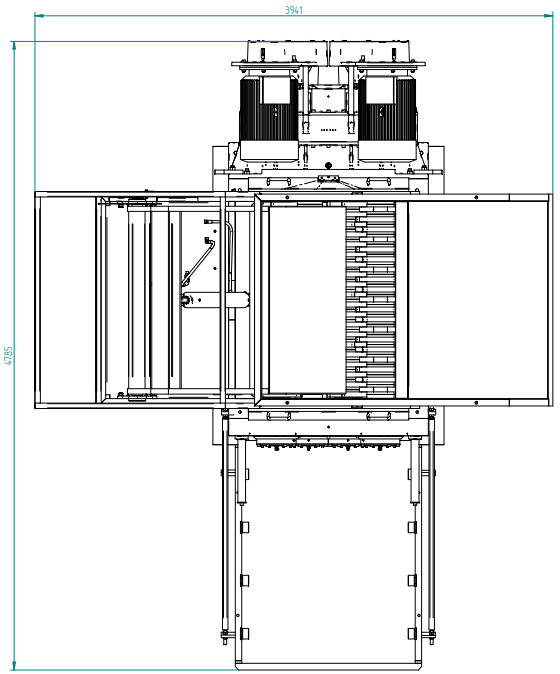

dropping/throw in opening have to be safeguarded by the part of the building site according to the safety regulations.

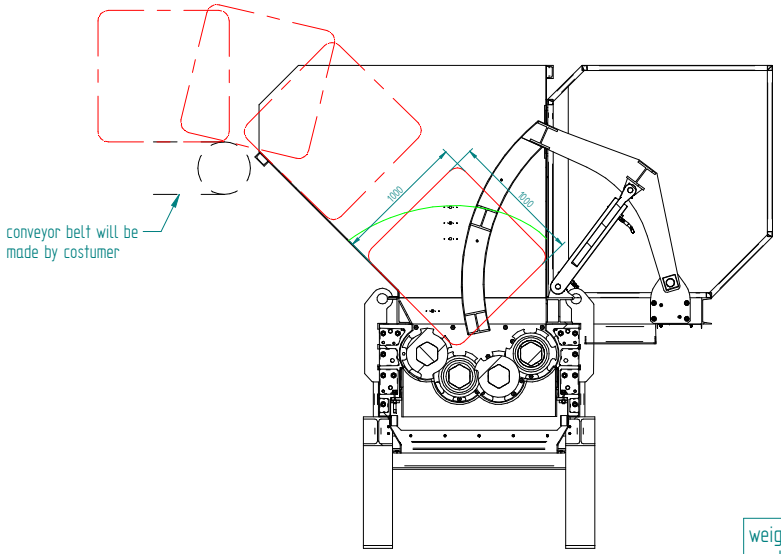

cut A–A

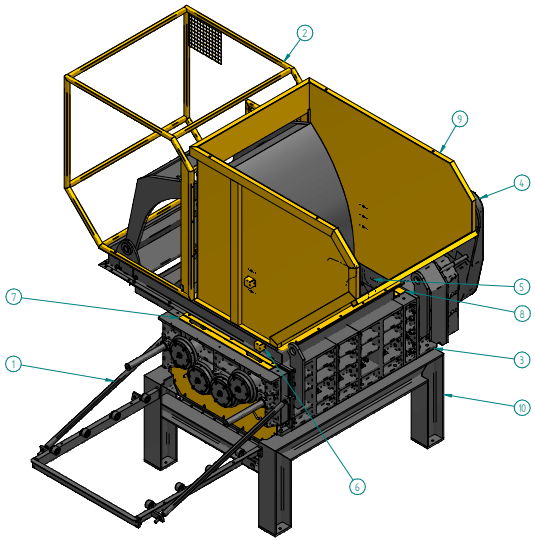

minimum distance for maintenance

Pos.	Part Name	Stk.	Article Nr.	Variant	Standard	Comment
10	supporting frame RS100–1500	1	UN047900			
9	hopper HBE500–1500	1	TR074700			
8	cover sheet 1220x1156x15 FL	1	ST700400			
7	cover sheet 1220x1156x15 LL	1	ST700300			
6	cover 110x80x70	4	ST098300			
5	holding device light barrier 0°	4	ST081800			
4	Shredder RS100–1500–110	1	RS103800	04	1	
3	chute RS100–1500	1	LG901900			
2	pressing device HBE500–1500	1	HBE50100	00	1	
1	grate discharge system RS800	1	RS006800			

weight:
machine: approx. 10000kg
hopper: approx. 900kg
support: approx. 800kg
HBE: approx. 2000kg

No.	Alteration	Date	Name	Alt.No.
3				
2				
1				

All rights reserved for this drawing

	Date	Name	Material:	Prefabricat:	Raw Part No.:
drawn	10.06.13	pertek			
control	–	–			

UNTHA shredding technology
A-5421 Kuststr.Moldaustr. 14
Telefon: 06244/7016
Telefax: 06244/7016-1
untha@untha.com

Part Name:
plant RS100–1500–110

Scale	Format	Europ.Display	Tolerance Level	Documentnumber	Weight
M 120	A1			0000095839ABM	kg

Project/Order No.	Page
N-5222	1/1

Article-No.	Variant - Standard
	–

Replacing	Replaced by
	–